S_Sel = Assert Enable DMA and next step
50ns Delay

On Second time PH0 High + half cycle... turn off FlipFlop

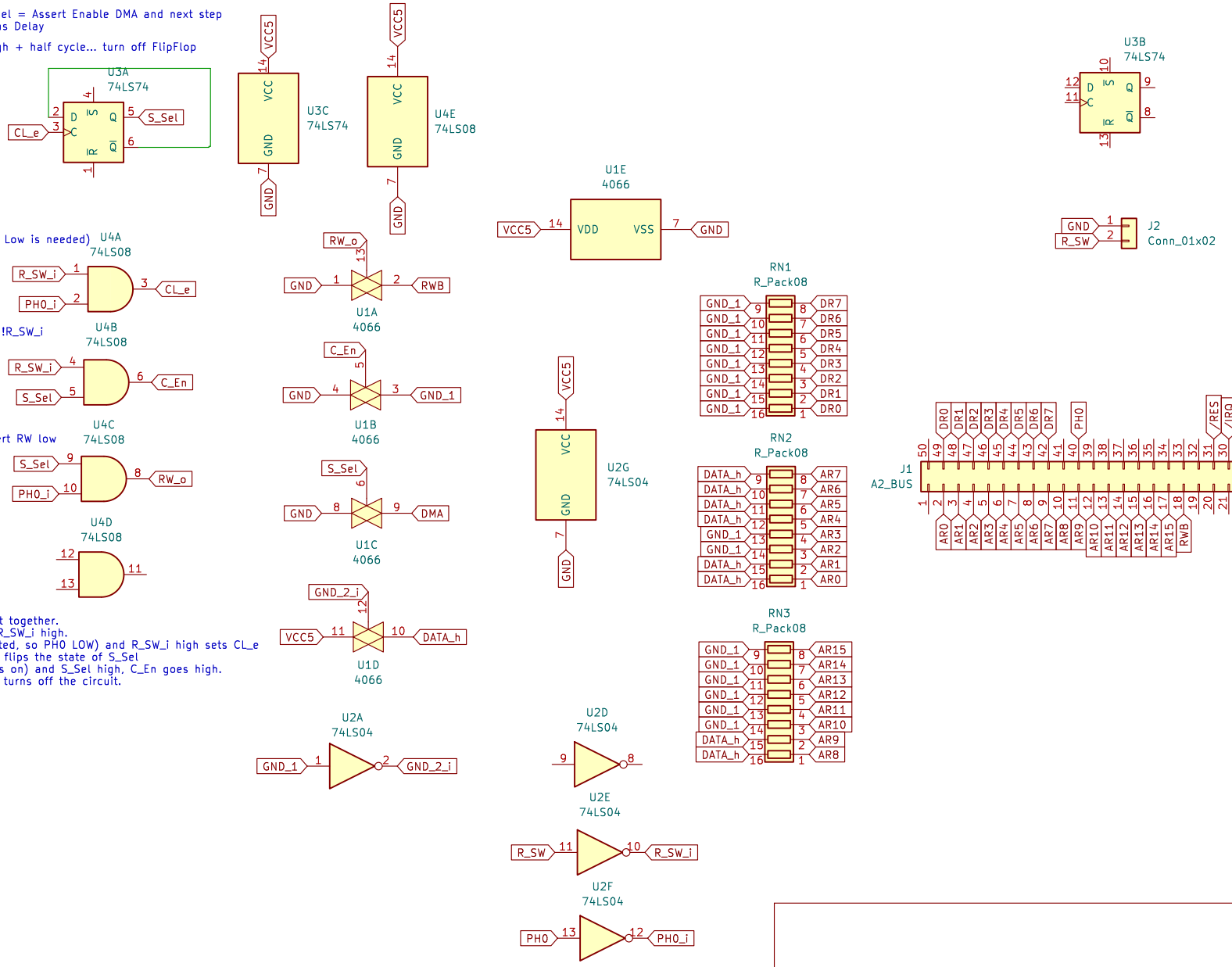

Sheet: /
File: RESET CARD.kicad_sch

Title:

Size: A4	Date:	Rev:
KiCad E.D.A. kicad 7.0.9		Id: 1/1